ATOMBOTIX
Your One-Stop Robot Building Partner

ENGINEERING GUIDE

Steering Drive Wheel Selection Guide

6 Key Factors for AGV & AMR Development



6 Key Factors

- Application
- Load & Layout
- Motion
- Mechanical
- Electrical
- Special Requirements

FACTOR 01 OF 06

Application & Operating Conditions

Define the vehicle type and operating conditions before selecting a steering drive wheel.

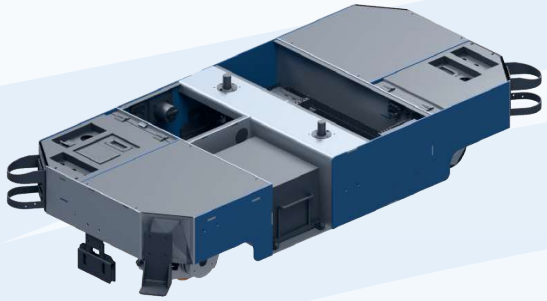

Under-ride Lifting AGV

Low-profile lifting and transport of pallets, racks or workpieces.



Stacker AGV

Fork handling, stacking and high-lift transport.



Tugger AGV

Towing carts and trailers for internal material transport.

OPERATING CONDITIONS TO DEFINE

Floor conditions

Surface type, joints and unevenness.

Slopes & terrain

Gradient, ramps and ground clearance.

Duty cycle

Operating hours, starts, travel distance and typical load.

Environment

Temperature, humidity and dust or water exposure.

Check travel distance and typical load. Operating conditions affect traction, suspension, heat dissipation and durability.

FACTOR 02 OF 06

Load Capacity & Drive Wheel Layout

Start with the vehicle mass plus its maximum payload. Then evaluate the load at each wheel from the chassis geometry, center of gravity, payload position and suspension.

01 / VEHICLE & PAYLOAD

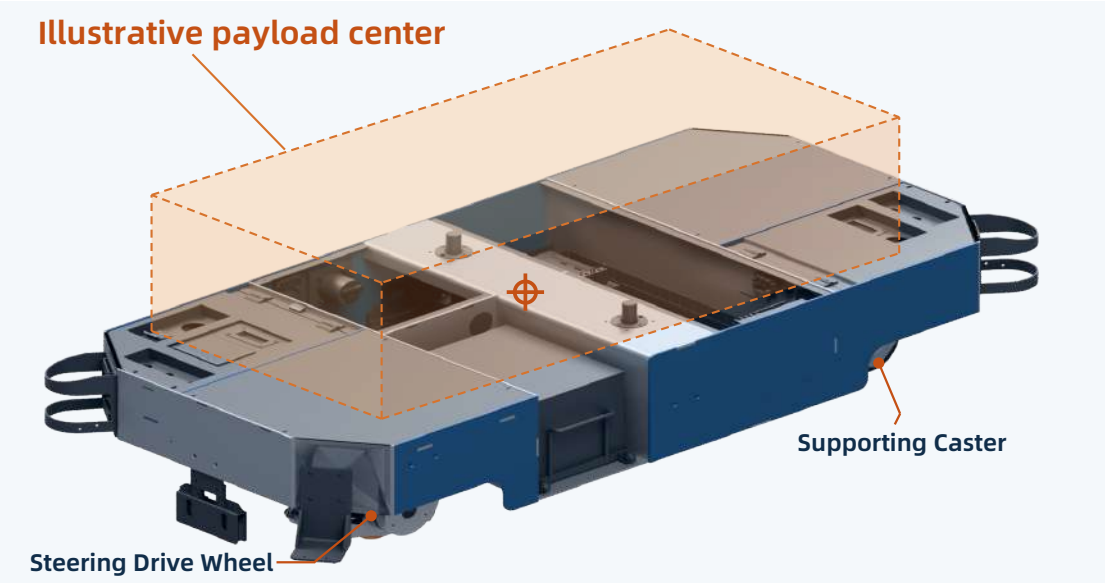

02 / WHEEL CONFIGURATIONS

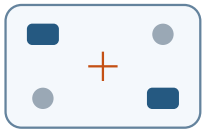

2 drive + 2 support

Two steering drive wheels and two supporting casters.

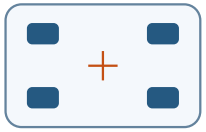

4 drive

Four steering drive wheels. Verify steering and control needs.

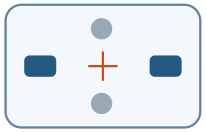

Other layouts

Choose wheel positions to suit the chassis, load and motion needs.

Blue: Drive wheel / Gray: Support wheel / Orange: vehicle CG

Total mass

m_{total} = vehicle mass + maximum payload mass

→

Wheel loading

Evaluate vertical load at each wheel

→

Available traction

$F_{max} \approx \mu \times N$

μ: wheel-floor friction coefficient / N: wheel normal force

Check mechanical load capacity

Determine the maximum vertical load per wheel from the center of gravity, payload position, chassis and suspension. Allow for dynamic loading.

Check available traction

Check that available traction meets driving demand for the actual wheel and floor conditions.

FACTOR 03 OF 06

Motion & Driving Performance

Once wheel loads are understood, define the force, torque and speed required across the vehicle's operating profile.

FORCES ON A SLOPE

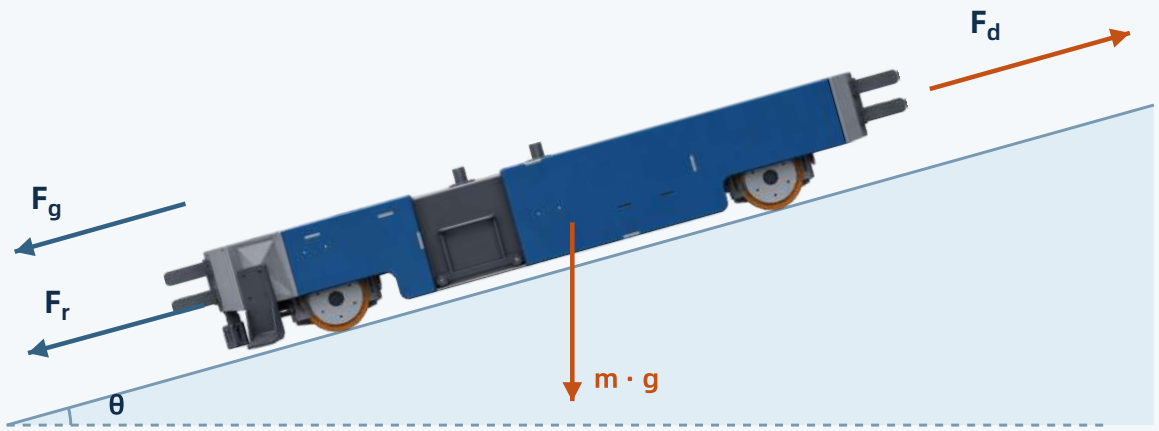

F_r Rolling resistance F_g Grade resistance (gravity along slope) F_a Acceleration demand F_d Driving force

DRIVING FORCE, TORQUE & SPEED

Vehicle driving force

$$F_d = F_r + F_g + F_a$$

Rolling resistance + grade resistance + acceleration demand.

Wheel torque

$$T_w = F_w \times r_w$$

Allocate vehicle driving force by drive layout to obtain force per wheel.

Wheel speed (rpm)

$$n_w = 60\ v\ /\ (2\pi\ r_w)$$

v in m/s; effective rolling radius in m.

Continuous torque

Sustained torque and speed for the required duty cycle.



Peak torque

Short-duration torque for events such as uphill acceleration.

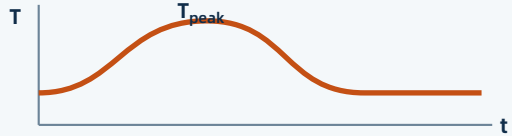

Check the torque-speed curve, allowed overload duration and thermal limits.

↗ Speed	→ Acceleration	∠ Gradeability	Turning	Braking	Duty cycle
Wheel and motor speed	Driving force and torque	Force on slopes	Range and control	Stopping and brake type	Continuous vs. peak

FACTOR 04 OF 06

Mechanical Integration & Installation

Check the installation envelope, steering clearance and suspension travel against the chassis.

HORIZONTAL STEERING DRIVE



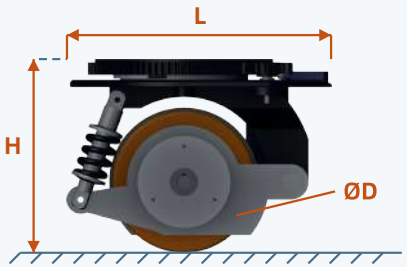

Orthographic side view

Check available installation height and suspension clearance.

VERTICAL STEERING DRIVE



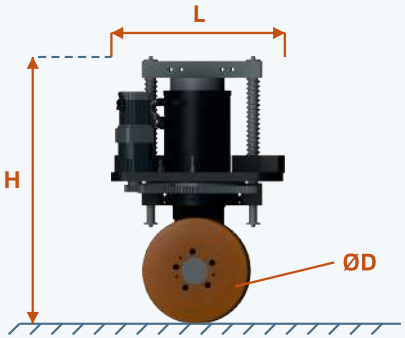

Orthographic side view

Check vertical mounting space and suspension travel.

H ground to top of unit / L projected length / ØD wheel diameter / Confirm mounting-face height on the model drawing.

Installation checks

Installation envelope

Check the space and ground clearance.

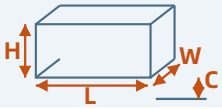

Steering clearance

Verify sweep radius R and clearance to the chassis.

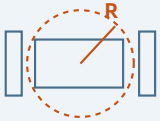

Mounting interface

Check bolt pattern, mounting strength and load capacity.



Suspension & service

Check full travel, cable routing and maintenance access.



Interference check — Check clearance through the full steering range combined with the full suspension travel.

FACTOR 05 OF 06

Electrical & Control Compatibility

Match the steering drive unit to the vehicle power supply and motion control architecture.

VEHICLE CONTROL & DRIVE ARCHITECTURE

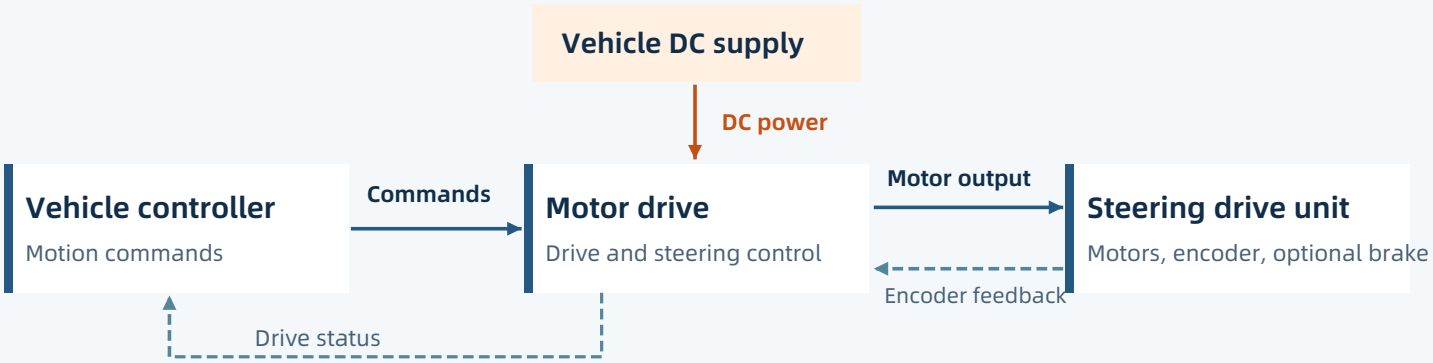

Conceptual architecture. Verify wiring, feedback and brake-control paths for the selected configuration.



Horizontal steering drive

01 Power supply

Confirm voltage, available current and DC architecture. 24 V and 48 V are examples.

02 Communication

Check that the drive and vehicle controller support the specified interface, such as CANopen.

03 Position & speed feedback

Match encoder type and signals for wheel speed, position and steering angle.

04 Braking & safety functions

Check holding brake and stopping requirements at both the drive-unit and vehicle levels.

Integration check Verify how the power supply, control, feedback and braking work together.

FACTOR 06 OF 06

Special Application Requirements

Identify special operating conditions early. They can narrow the available drive configurations or require customization.



Cold storage

Check operating temperature and compatibility of motors, lubricants and seals.



Water & dust exposure

Check water and dust exposure, ingress protection and sealing.



Chemical exposure

Check wheel, seal and component compatibility with the chemicals present.



Noise sensitivity

Check operating noise against site limits under the relevant duty cycle.



Hazardous locations

Confirm applicable protection requirements and equipment certification.

Engineering note Confirm operating limits, protection requirements and applicable certifications.

SELECTION SUMMARY

Selection Workflow & Engineering Support

Evaluate load rating, torque and speed, mechanical fit and controls together.

SIX STEPS FOR SELECTING A STEERING DRIVE

01 **Define the application**

02 **Evaluate load and layout**

03 **Calculate motion needs**

04 **Check mechanical fit**

05 **Confirm electrical compatibility**

06 **Review special requirements**

What to share with our engineering team

- ☑ Vehicle type, application and operating conditions
- ☑ Vehicle mass, payload, wheel layout and weight distribution
- ☑ Speed, acceleration and grade requirements
- ☑ Installation dimensions and clearances
- ☑ Power supply, control interfaces and braking requirements
- ☑ Environmental and protection requirements

ATOMBOTIX
Engineering Support
Share your project requirements so our team can help identify a suitable standard or customized steering drive configuration.
Visit atombotix.com

